NSERC SMART MICROGRID NETWORK
nsmg-net

Project 1.2

Overcurrent and Overload Protection of Multi-DER Microgrids

Amir Etemadi, Reza Iravani (University of Toronto)

September 26, 2012
Montreal

NSERC CRSNG

R&D Objectives:

Overcurrent protection of electronically-interfaced DER units

- fault detection
- current limitation
- fault clearance detection
- smooth controller restoration

Overload protection of electronically-interface DER units

- based on enhancement of overcurrent protection scheme

nsmg-net

NSERC CRSNG

Types of Electronically-Interfaced DER Units

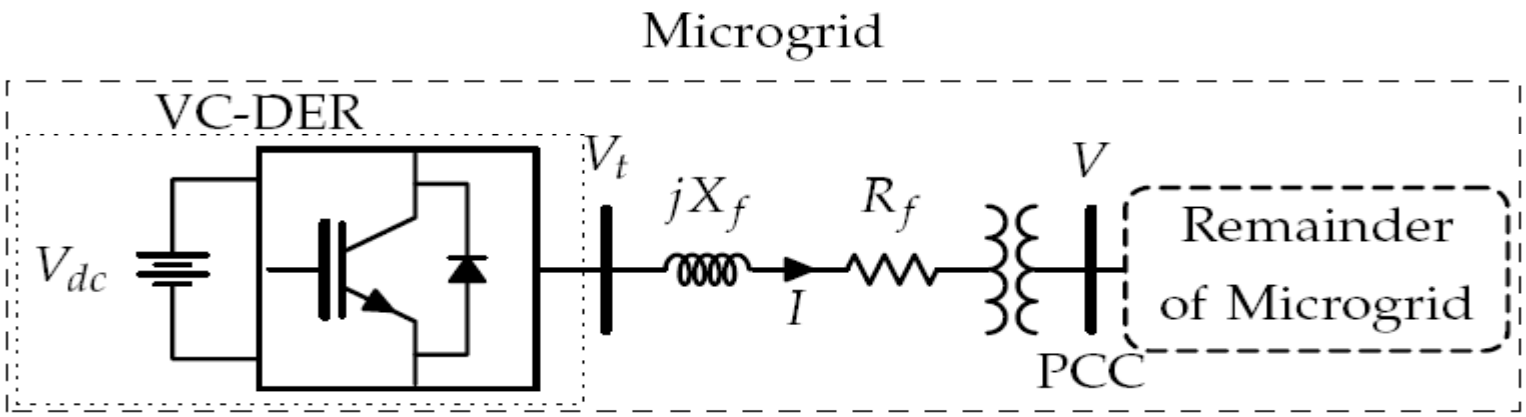

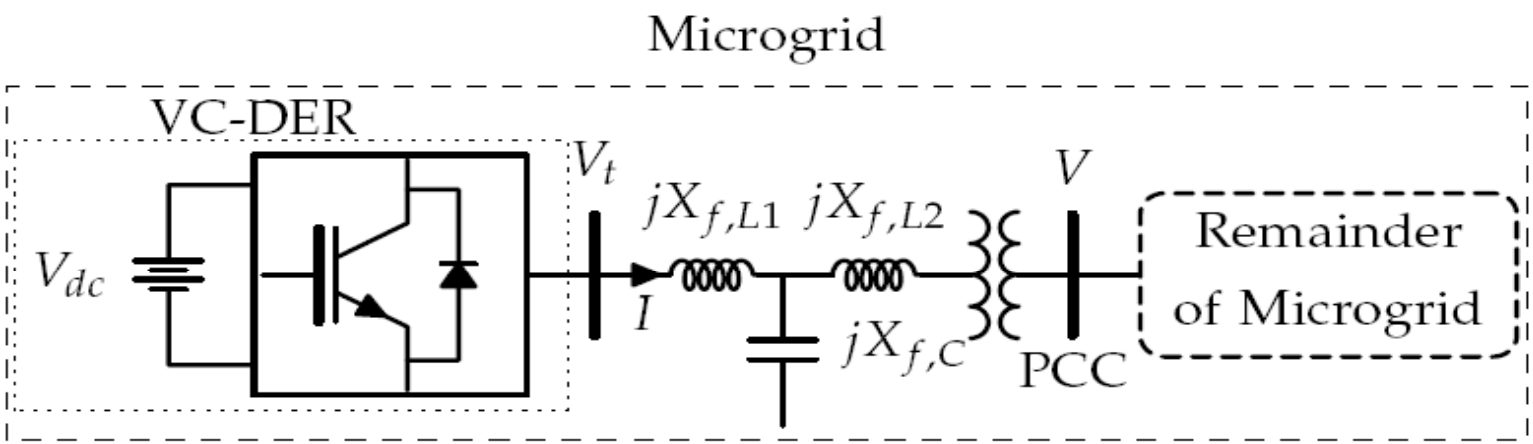

Fault Current Limiting Concept

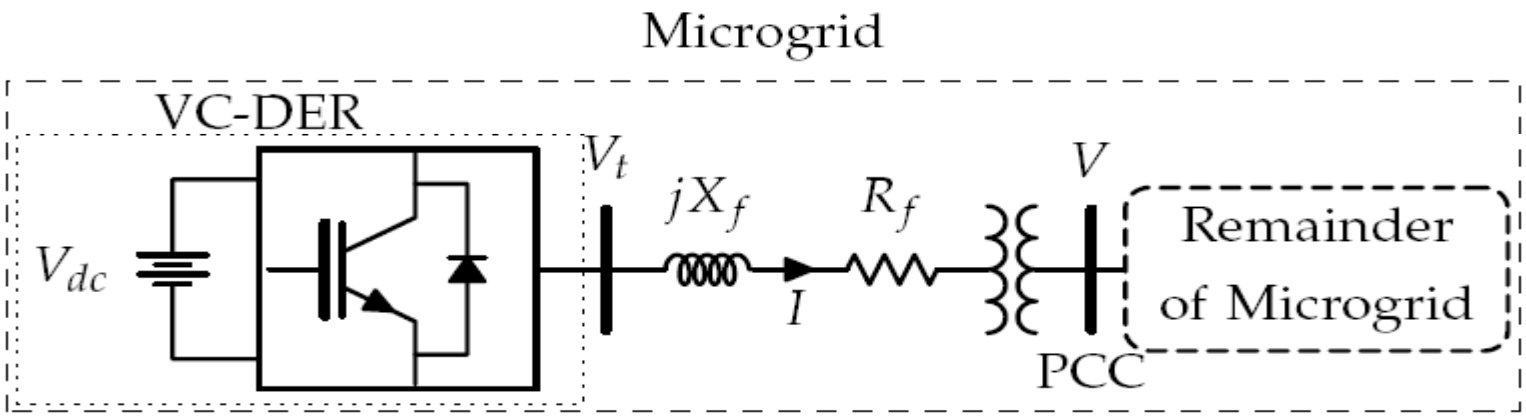

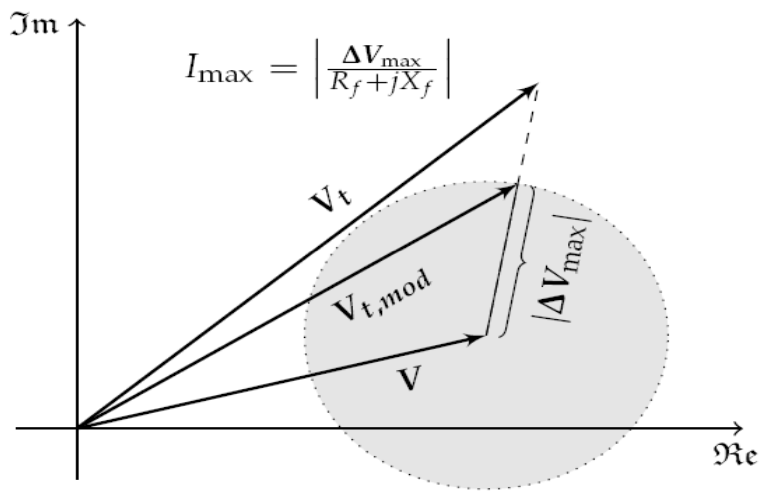

Flowchart of control scheme including Fault current limiter

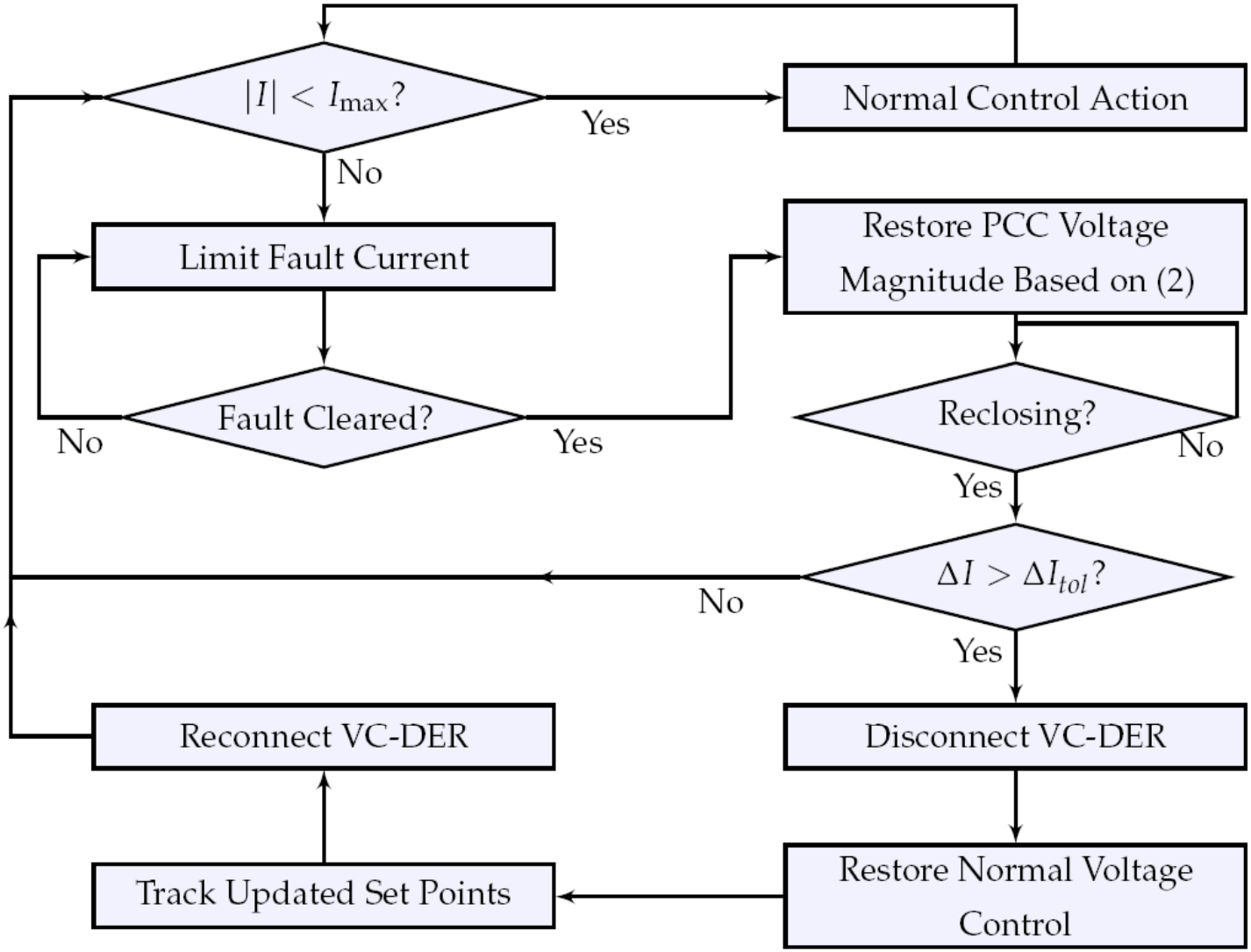

Studies Microgrid System

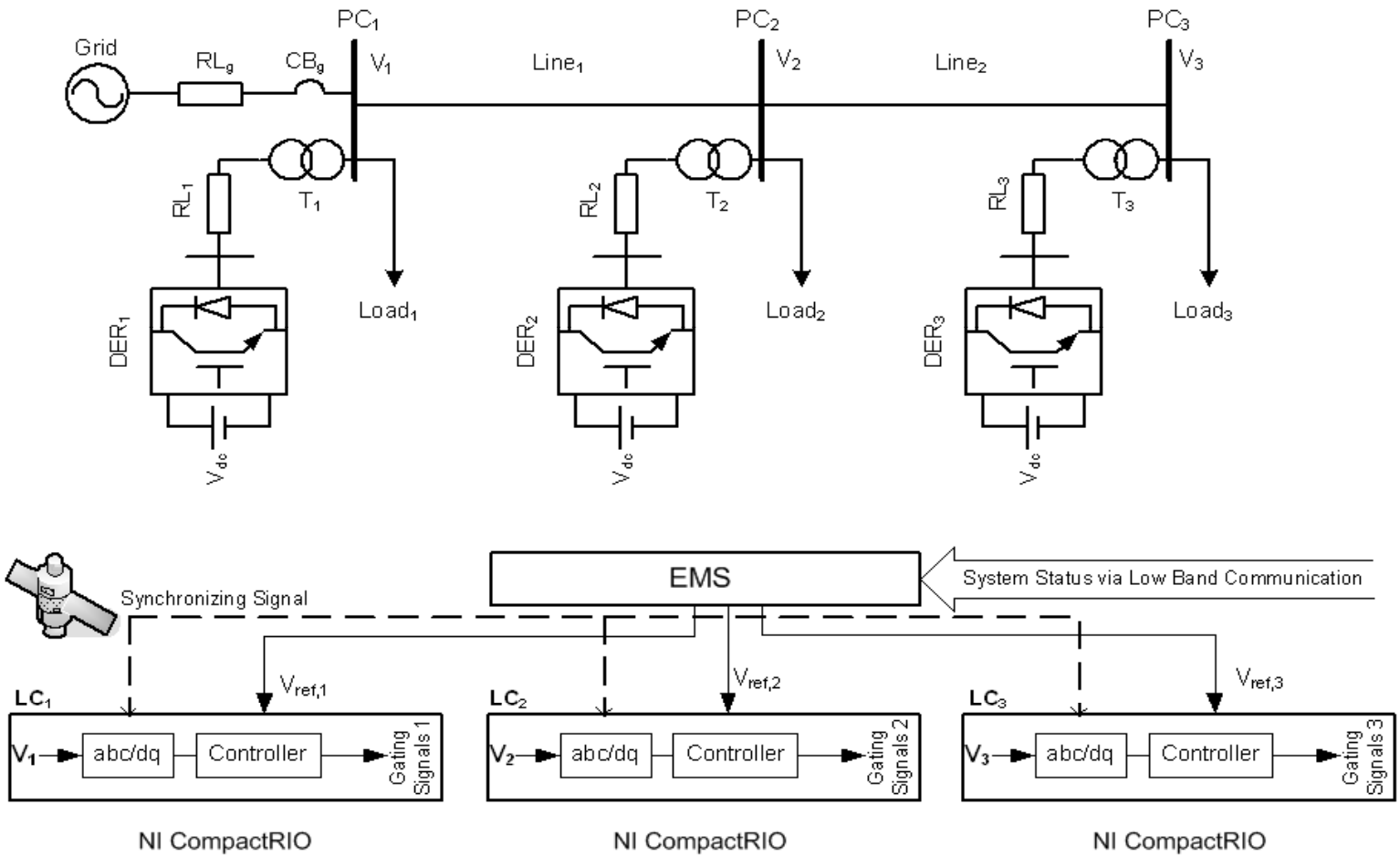

Transient response of DER1 to a L-L-L-G fault (Hardware-in-the-loop study results)

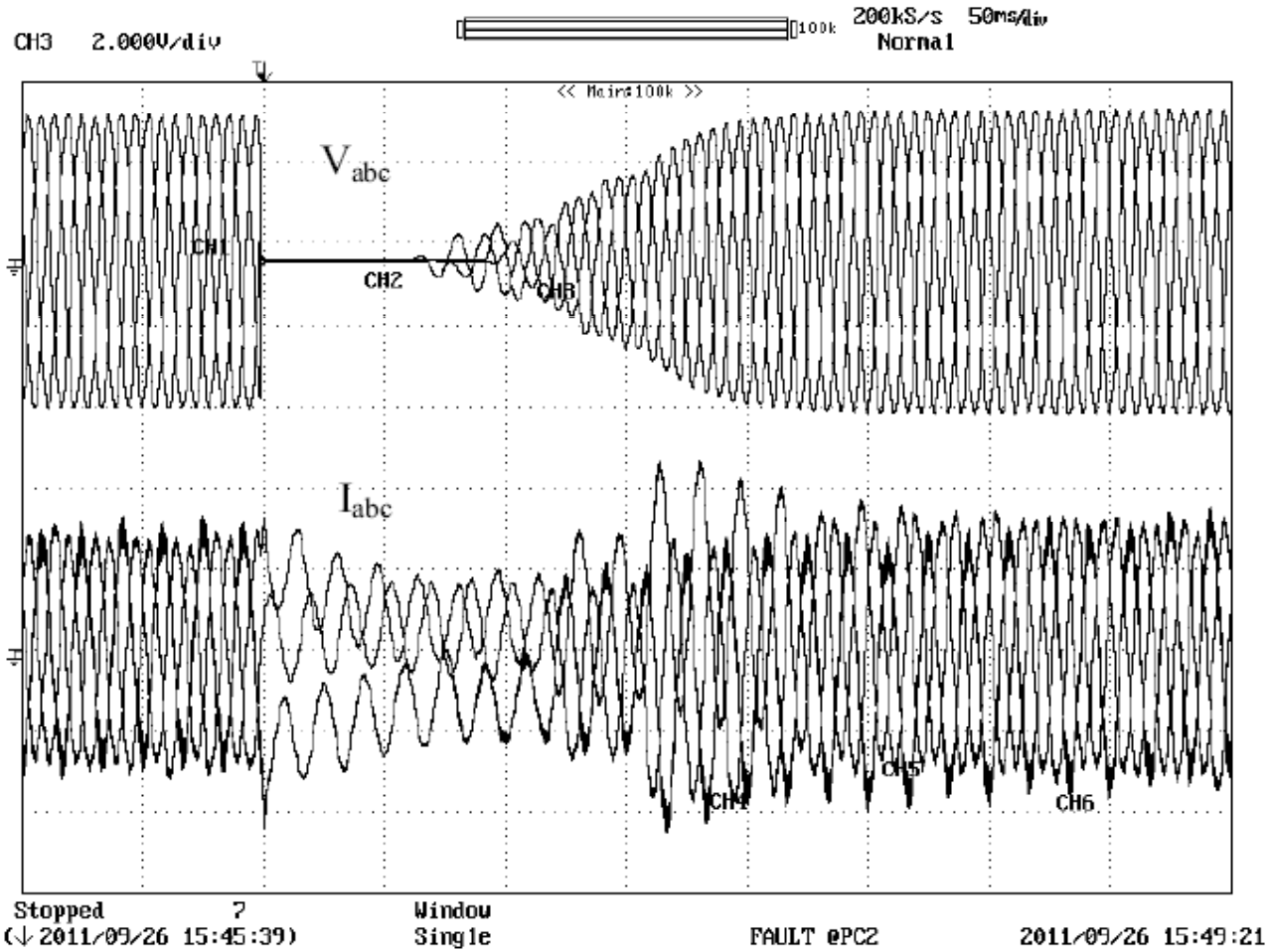

nsmg-net

NSERC CRSNG

Fault detection speed (Hardware-in-the-loop results)

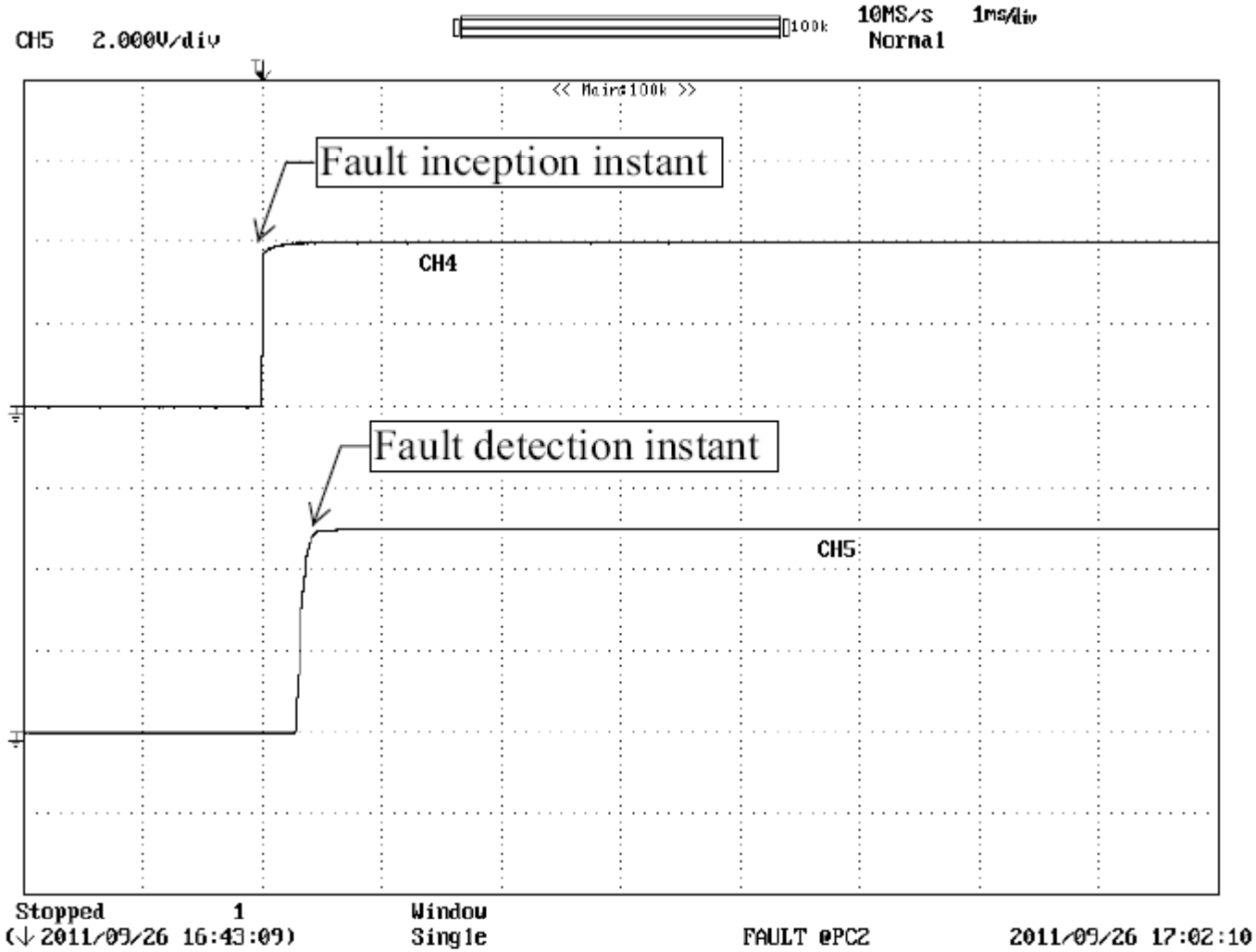

nsmg-net

NSERC CRSNG

Conclusions:

An overcurrent/overload protection strategy and the corresponding digital algorithms for electronically-interfaced DER units were developed.

The developed strategy also includes

- **fault detection,**
- **current limitation,**
- **fault clearance detection,**
- **smooth controller restoration,**

The algorithms were digitally implemented in a production grade hardware platform and tested/verified in an RTDS-based hardware-in-the-loop environment.

nsmg-net

NSERC CRSNG